TS 248TD, 96043032500, 2020-08

SPARE PARTS LIST

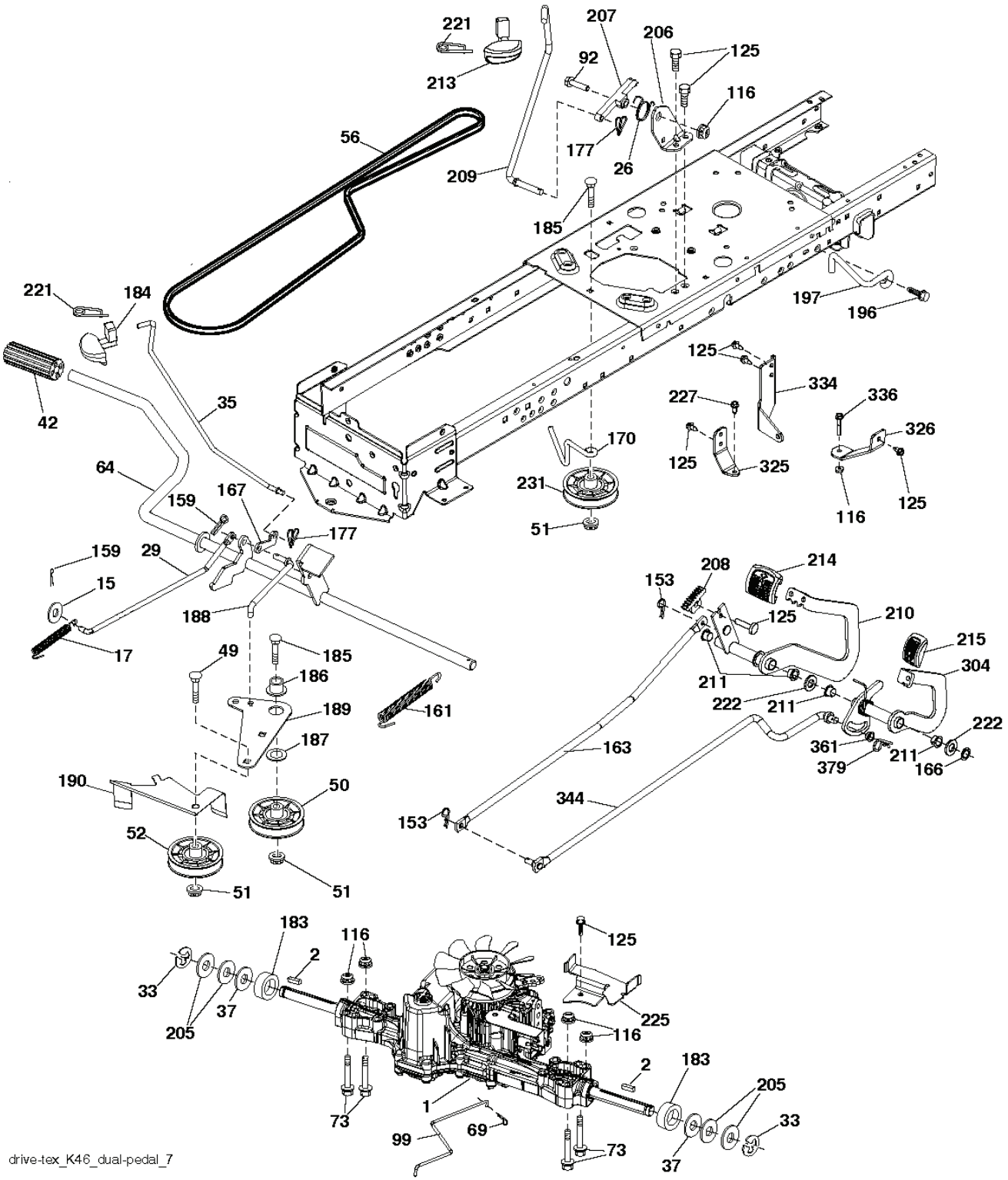

drive-tex_K46_dual-pedal_7

REF.	PART NO.	DESCRIPTION	REMARK	QTY.	KIT
1	000000000	W/O DESCRIPTION	TRANSAXLE TUFFTORQ K46 CR (501051401)	1	
2	532123583	KEY		1	
15	596565301	WASHER		1	
17	532413678	SRPING.BRAKE.K46.GREEN*SUBS/2*		1	
26	532199679	SPRING		1	
29	532403806	ROD		1	
33	812000001	RETAINER RING		1	
35	590605902	ROD		1	
37	532188967	WASHER		1	
42	532008883	PEDAL RUBBER		1	
49	596136201	BOLT		1	
50	532194327	PULLEY		1	
51	873900600	NUT		1	
52	532194326	PULLEY		1	
56	592855201	BELT		1	
64	532197865	SHAFT		1	
69	532423303	HAIR PIN COTTER		1	
73	596136501	BOLT		1	
92	595305701	SCREW		1	
99	582404501	ROD		1	
116	596135701	LOCK NUT		1	
125	817000512	SCREW		1	
153	532004497	CLIP		1	
159	596029501	PIN		1	
161	532105709	SPRING		1	
163	588566301	ROD		1	
166	532429164	NUT		1	
167	532405257	LATCH		1	
170	532413430	BELT GUIDE		1	
177	587225301	PIN		1	
183	532137057	SPACER		1	
184	587653701	HANDLE		1	
185	872110622	BOLT		1	
186	532194321	SPACER		1	
187	596135501	WASHER		1	
188	582217001	LINK		1	
189	532194317	PLATE		1	
190	532194318	BELT GUIDE		1	
196	817000616	SCREW		1	
197	587402001	BRACKET		1	
205	532121748	WASHER		1	
206	532448596	BRACKET		1	
207	587031402	LATCH		1	
208	596564101	GEAR		1	
209	590527802	ROD		1	
210	588987202	PEDAL		1	
211	532120183	BEARING		1	
213	532403119	CONTROL		1	
214	532421263	PAD		1	
215	596908301	PEDAL		1	
221	532403187	SPRING		1	
222	879212010	WASHER		1	
225	532403319	BELT GUIDE		1	
227	596135901	BOLT		1	
231	532407287	PULLEY		1	
304	588987302	PEDAL		1	
325	586431202	BRACKET		1	
326	586001102	BRACKET		1	
334	585882202	BRACKET		1	
336	587259602	BOLT		1	
344	597647201	ROD		1	
361	597136701	BUSHING		1	
379	596580601	PIN		1	

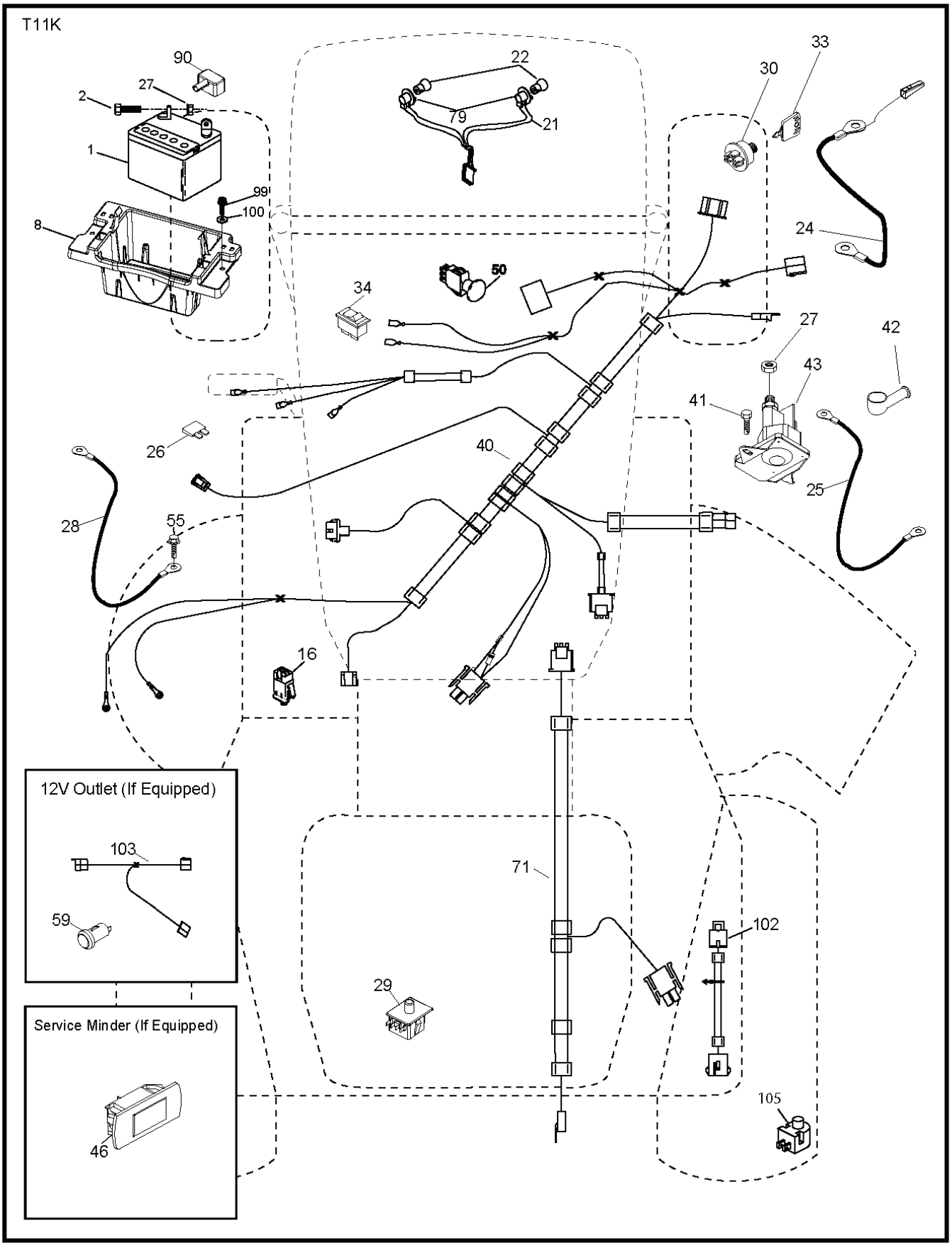
T11K
90
27
2
1
99
100
8
22
79
21
33
30
24
50
34
27
42
43
41
26
40
25
28
55
16
12V Outlet (If Equipped)
103
59
71
102
29
Service Minder (If Equipped)
46
105

REF.	PART NO.	DESCRIPTION	REMARK	QTY.	KIT
1	532163465	BATTERY		1	
2	874760412	BOLT		1	
8	532414126	TRAY		1	
16	532176138	MICRO SWITCH		1	
21	532400252	HARNESS		1	
22	532004152	BULB		1	
24	585555601	CABLE		1	
25	585555501	CABLE		1	
26	532175158	FUSE		1	
27	596133601	LOCK NUT		1	
28	532416588	CABLE		1	
29	532192749	SWITCH.SEAT.DP W/RAMPS		1	
30	532193350	IGNITION MODULE		1	
33	532411935	KEY		1	
34	532110712	SWITCH		1	
40	501132901	HARNESS		1	
41	817720408	SCREW		1	
42	532131563	COVER		1	
43	582042802	SOLENOID		1	
46	594919101	HOUR METER		1	
50	582107602	SWITCH		1	
55	817060512	SCREW		1	
71	532194276	CABLE ASSY		1	
79	532175242	HOLDER		1	
90	532435395	TERMINAL COVER		1	
99	817670412	SCREW		1	
100	596135301	WASHER		1	
102	532404454	CABLE		1	
105	532407568	SWITCH		1	

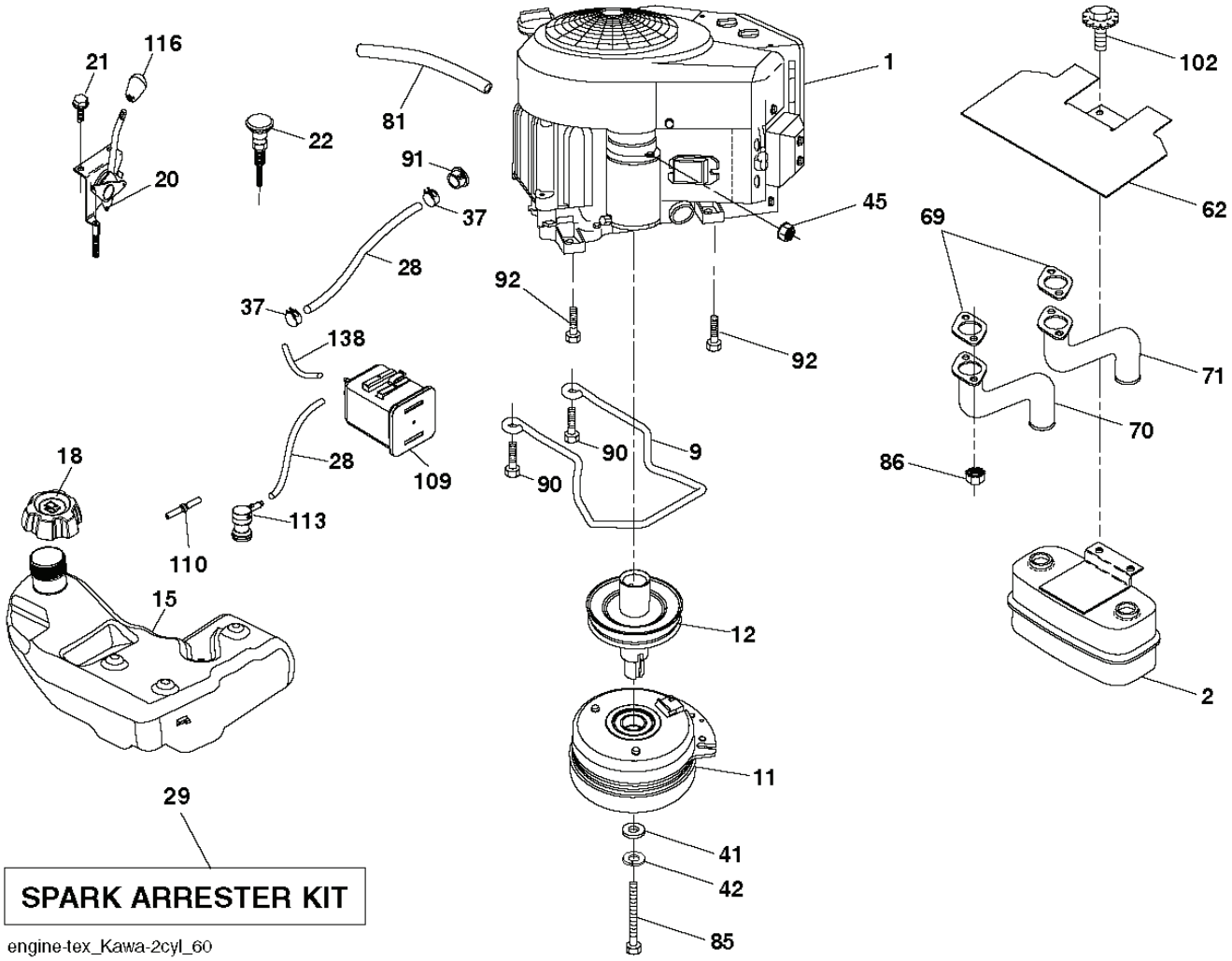

SPARK ARRESTER KIT

engine-tex_Kawa-2cyl_60

REF.	PART NO.	DESCRIPTION	REMARK	QTY.	KIT
1	000000000	W/O DESCRIPTION	ENGINE KAWASAKI MODEL NO. FR651V (593006001)	1	
2	589818701	MUFFLER		1	
9	501832602	KEEPER		1	
11	587255001	CLUTCH		1	
12	586899601	PULLEY		1	
15	599837601	FUEL TANK ASSY	Fits 2.75" filler neck	1	
18	585124801	FUEL CAP ASSY	Fits 2.75" filler neck	1	
18	529989702	CAP	Fits 2.00" filler neck	1	
20	532424341	CONTROL THROTTLE		1	
21	532438562	SCREW		1	
22	532189541	CHOKE CONTROL		1	
28	532401135	LINE.FUEL.64"REAR.EMIS		1	
29	532137180	SPARK ARRESTER KIT		1	
37	532123487	HOSE CLAMP		1	
41	532126197	WASHER		1	
42	596238901	WASHER		1	
45	596133601	LOCK NUT		1	
62	532434017	SHIELD		1	
69	532178151	MUFFLER GASKET		1	
70	583955601	TUBE		1	
71	583955701	TUBE		1	
81	532148456	TUBE		1	
85	501606701	BOLT		1	
86	532184362	NUT		1	
90	817000616	SCREW		1	
91	532187495	BUSHING		1	
92	817120616	SCREW		1	
102	817000512	SCREW		1	
109	532414114	FILTER		1	
110	532414118	VALVE ASSY		1	
113	532414127	VALVE		1	
116	539132624	KNOB		1	
138	532420718	PURGE LINE		1	

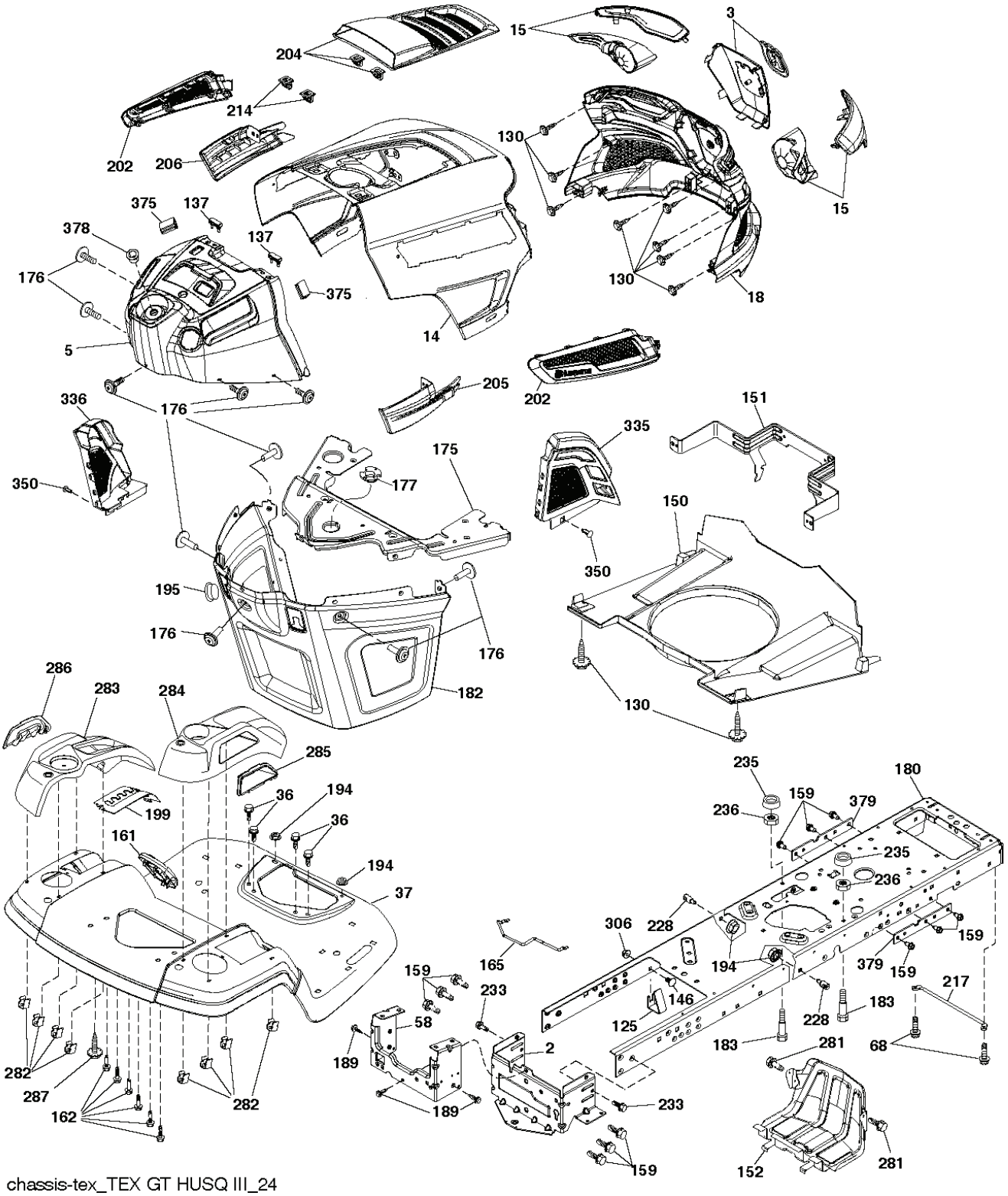

chassis-tex_TEX GT HUSQ III_24

REF.	PART NO.	DESCRIPTION	REMARK	QTY.	KIT
2	532412282	PLATE		1	
3	597688201	COVER		1	
5	590748811	DASHBOARD		1	
14	532441177	HOOD		1	
15	597867801	SERVICE KIT		1	
18	597407101	GRILLE		1	
36	817060512	SCREW		1	
37	532441178	FENDER		1	
58	532412281	PLATE		1	
68	596030701	SCREW		1	
125	581684801	CLIP		1	
130	596321701	SCREW		1	
137	532407590	DAMPING PIECE		1	
146	581857901	BOLT		1	
150	532439774	AIR DUCT		1	
151	532436670	BRACKET		1	
152	532439870	SHIELD		1	
159	817000612	SCREW		1	
161	532439781	FUEL		1	
162	596134101	SCREW		1	
165	532194330	SUPPORT		1	
175	590607702	CROSS MEMBER		1	
176	532400776	SCREW		1	
177	532195228	BUSHING		1	
180	593346301	CHASSIS		1	
182	532406859	DASH		1	
183	595305701	SCREW		1	
189	817000512	SCREW		1	
194	596135701	LOCK NUT		1	
195	532404137	TROU*RPL.PAR 532401556428		1	
199	532198259	PLATE		1	
202	597867701	SERVICE KIT	RH	1	
204	597408001	VENT		1	
205	532439730	SKIRT	RH	1	
206	532439729	SKIRT	LH	1	
214	532199145	CLIP		1	
217	532409167	ROD		1	
228	593824001	STUD		1	
233	532196539	BOLT		1	
235	596564201	SPACER		1	
236	873930500	NUT		1	
281	817000616	SCREW		1	
282	532414110	CLIP		1	
283	532439861	CONSOLE		1	
284	532439823	CONSOLE		1	
285	532416315	CONSOLE		1	
286	532416317	CONSOLE		1	
287	817600406	SCREW		1	
306	873900600	NUT		1	
335	532448204	COVER		1	
336	532445309	COVER		1	
350	532445143	CLIP		1	
375	586908201	BUMPER		1	
378	590849801	BUSHING		1	
379	593206902	PLATE		1	
- -	597334801	BUMPER ASSY		1	

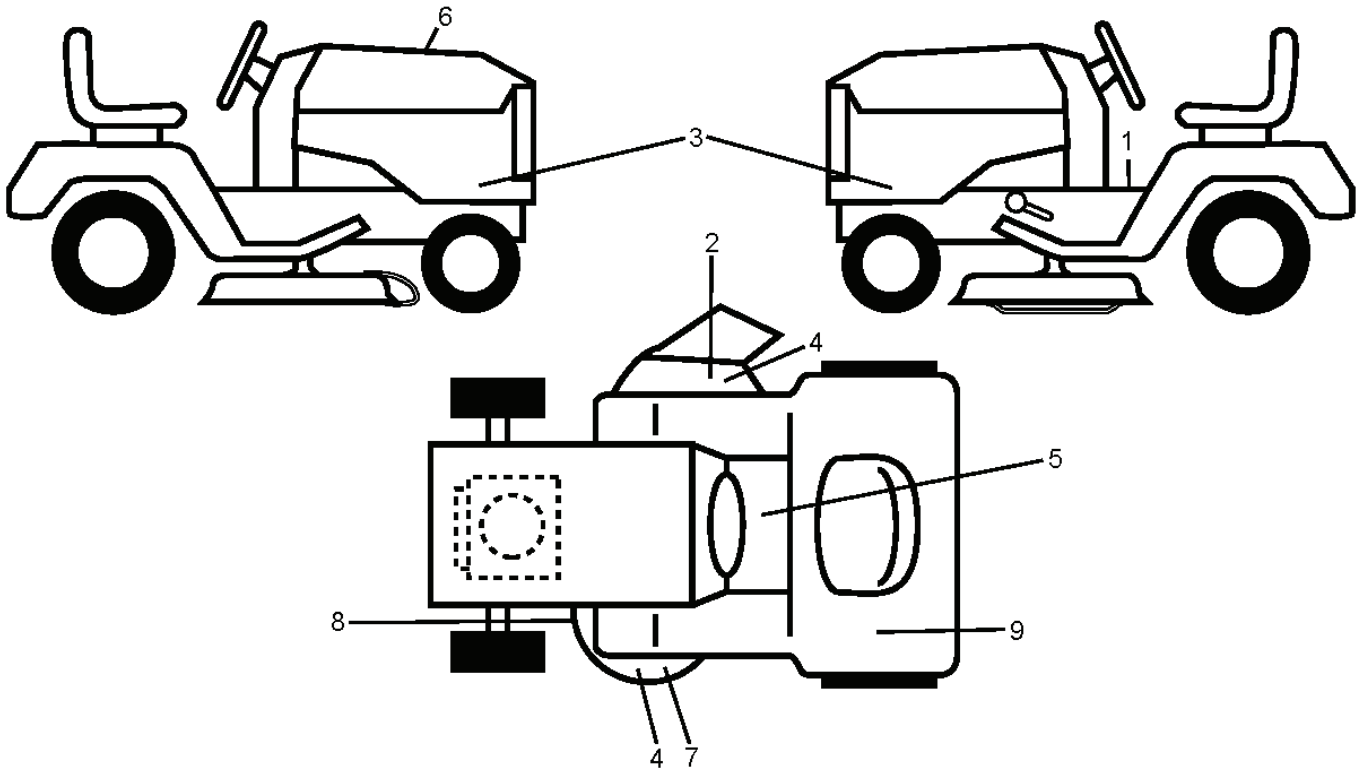
6
3
1
2
4
5
8
9
4
7

REF.	PART NO.	DESCRIPTION	REMARK	QTY.	KIT
1	581579001	DECAL		1	
2	586978801	DECAL		1	
3	529456401	DECAL		1	
4	589357901	DECAL		1	
5	596024201	DECAL		1	
6	589413701	DECAL		1	
7	590885001	DECAL		1	
8	581580002	DECAL		1	
9	529405301	DECAL		1	
- -	501749001	DECAL		1	
- -	581724801	DECAL		1	

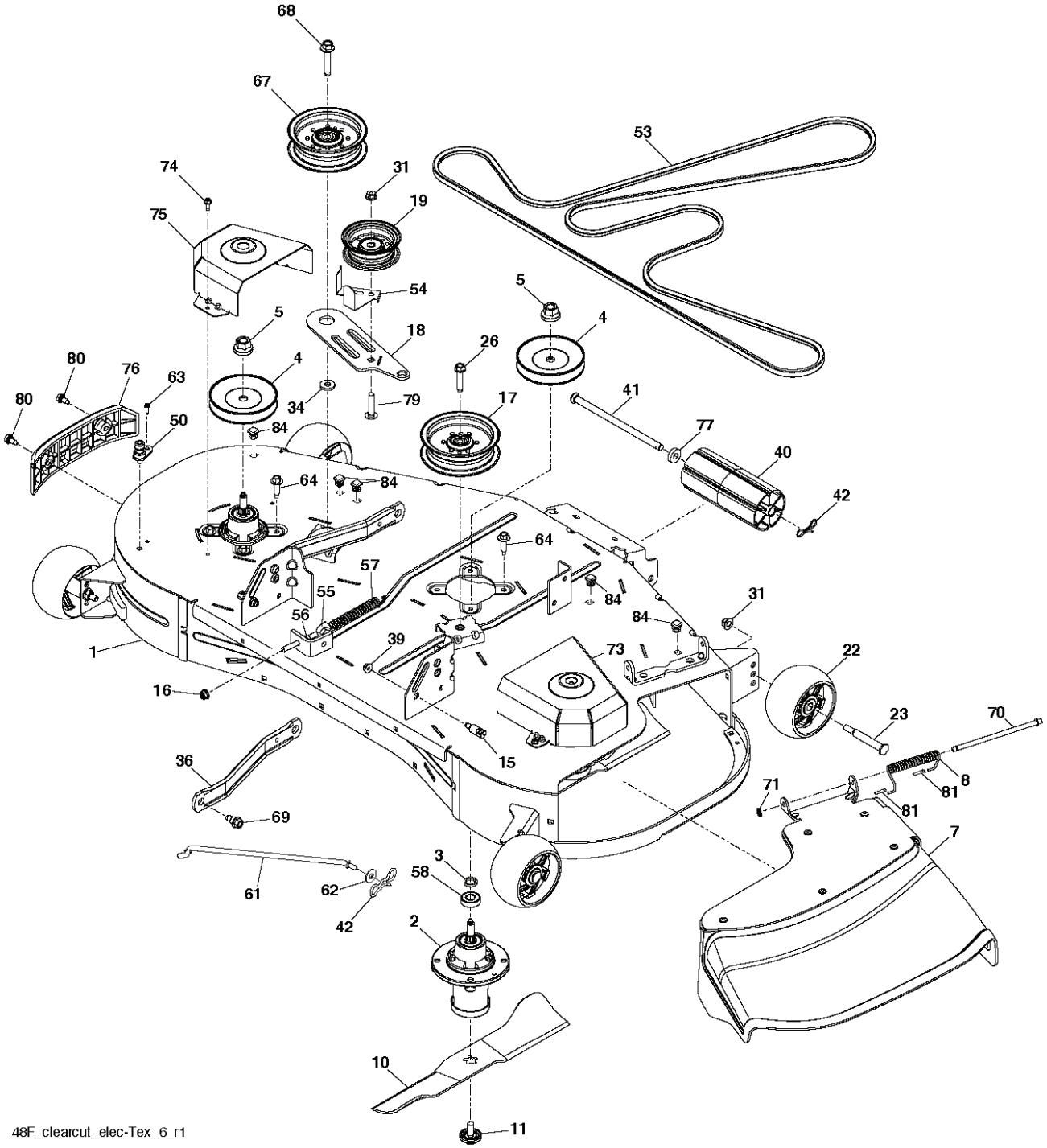
68
67
53
74
31
19
75
54
5
5
4
18
26
4
80
76
63
80
34
79
17
41
50
84
77
40
64
84
42
64
57
55
84
31
56
84
39
73
22
1
16
23
70
15
36
8
71
81
81
69
7
3
58
61
62
42
2
10
11
48F_clearcut_elec-Tex_6_r1

REF.	PART NO.	DESCRIPTION	REMARK	QTY.	KIT
1	583810001	SERVICE KIT		1	
2	539131898	SPINDLE		1	
3	532187690	WASHER		1	
4	532173434	PULLEY		1	
5	596134801	HEXAGON NUT		1	
7	593649701	DEFLECTOR ASSY		1	
8	587354701	SPRING		1	
10	588811002	BLADE		1	
11	532193003	SCREW		1	
15	593824001	STUD		1	
16	594944401	NUT		1	
17	532196104	PULLEY		1	
18	588812202	ARM		1	
19	532193197	PULLEY		1	
22	589527301	WHEEL		1	
23	596434404	BOLT		1	
26	588438301	SCREW		1	
31	873900600	NUT		1	
34	532178515	WASHER		1	
36	587140502	ARM		1	
39	596135701	LOCK NUT		1	
40	532176066	ROLLER		1	
41	594092501	ROD		1	
42	532194208	PIN		1	
50	532415598	HOSE COUPLING		1	
53	599275701	BELT		1	
54	532141043	GUARD		1	
55	596240801	BOLT		1	
56	596039201	LOCK NUT		1	
57	587358401	SPRING		1	
58	532110485	BEARING		1	
61	532443237	ROD		1	
62	596133201	WASHER		1	
63	596637301	SCREW		1	
64	584953901	BOLT		1	
67	532196106	PULLEY		1	
68	596564003	BOLT		1	
69	532196539	BOLT		1	
70	595297001	ROD		1	
71	532110452	NUT		1	
73	588812402	COVER		1	
74	532137729	SCREW		1	
75	588813102	COVER		1	
76	582541103	BUMPER		1	
77	582360501	BUSHING		1	
79	596136201	BOLT		1	
80	532170165	BOLT		1	
81	532105304	HUB CAP		1	
84	596952201	PLUG		1	
- -	532416405	COUPLING		1	

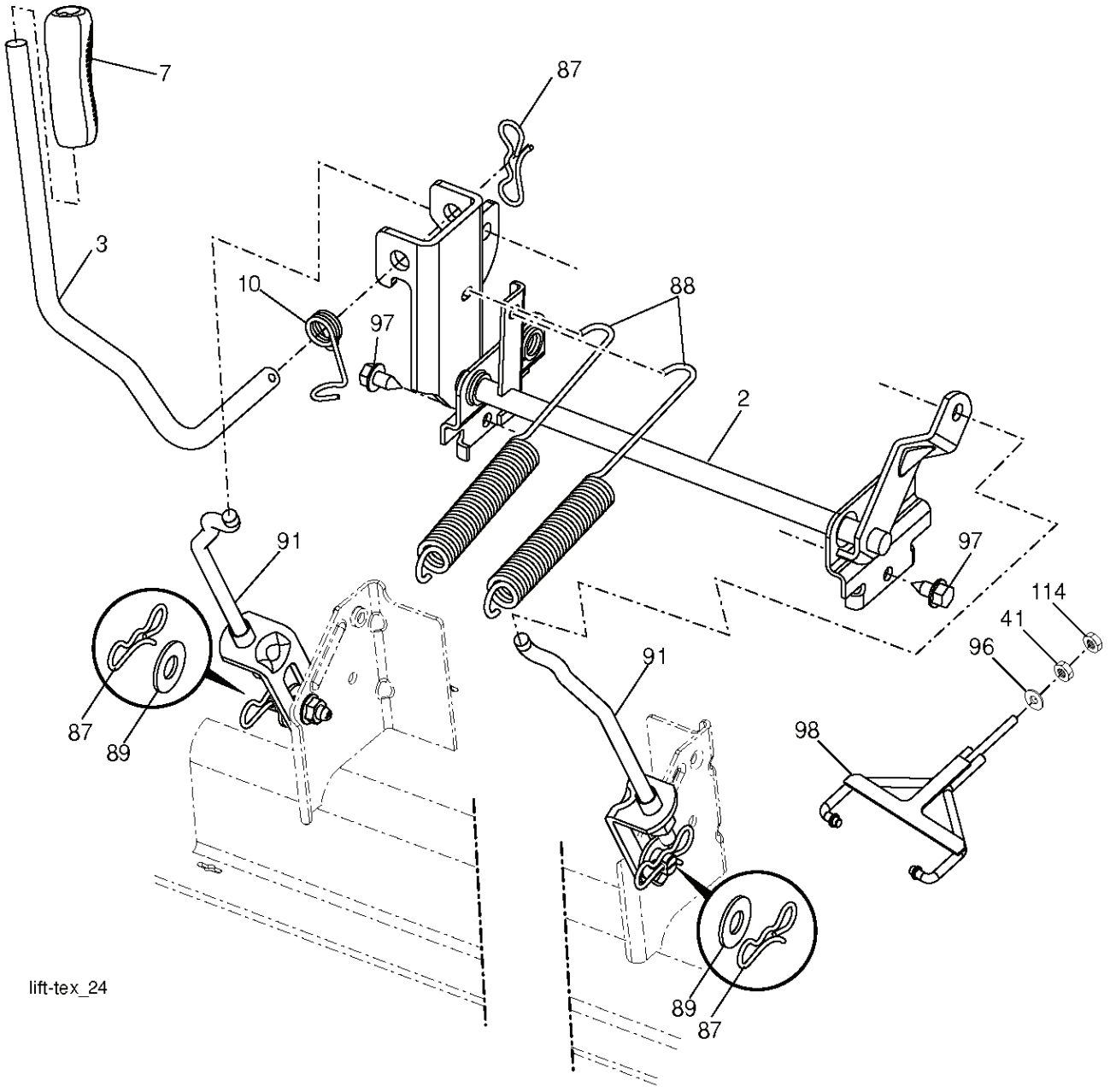
7
87
3
10
97
88
2
91
97
114
41
96
91
87
89
98
89
87
lift-tex_24

REF.	PART NO.	DESCRIPTION	REMARK	QTY.	KIT
2	532422027	SHAFT		1	
3	594018001	LEVER	RH	1	
7	580962301	GRIP		1	
10	532196314	SPRING		1	
41	589464902	NUT		1	
87	532194209	SPRING		1	
88	532410710	SPRING		1	
89	819191912	WASHER		1	
91	589464805	LINK ASSY		1	
96	593842101	BUSHING		1	
97	817000612	SCREW		1	
98	574822501	SUSPENSION		1	
114	873360700	NUT		1	

SCH12

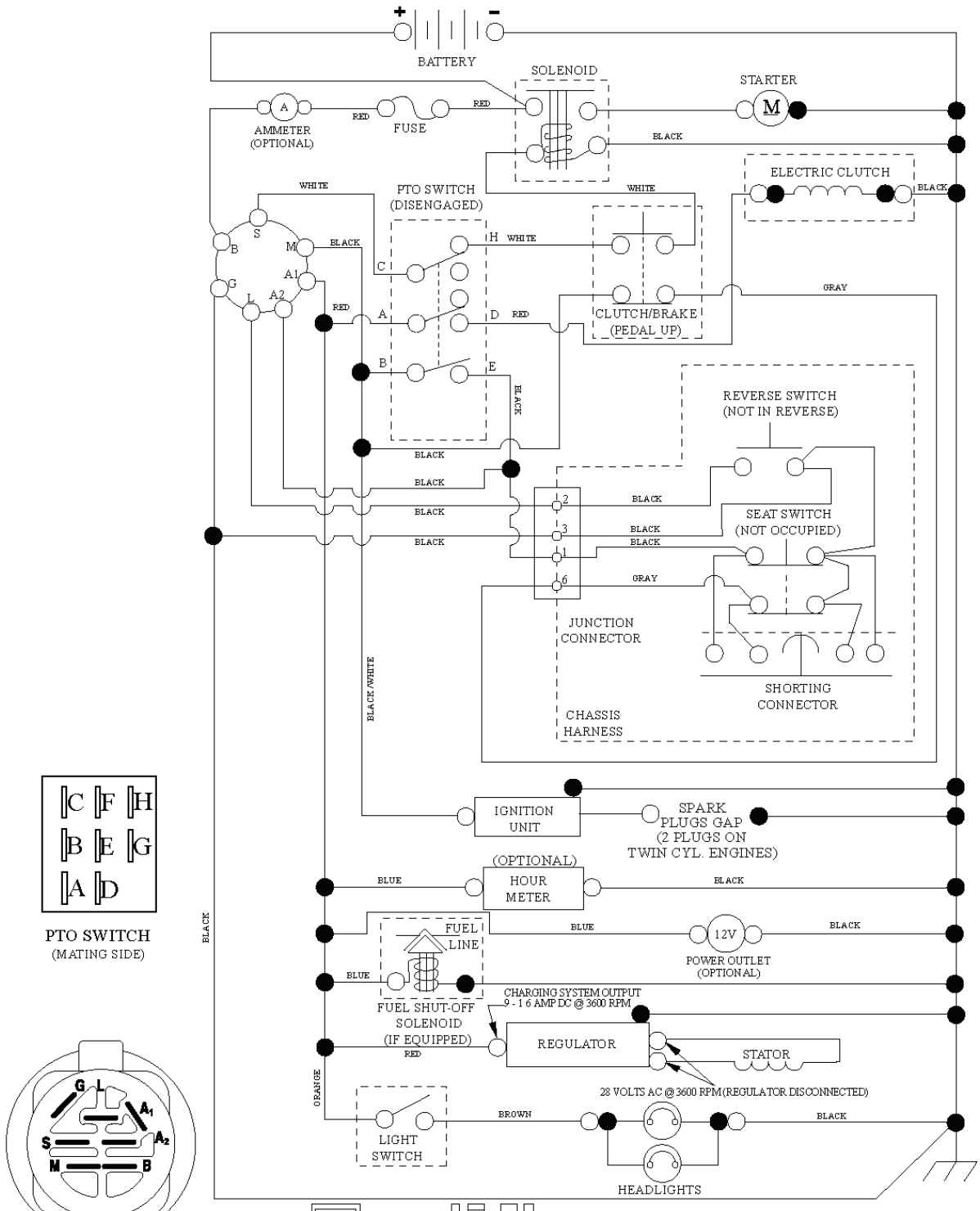

PTO SWITCH
(MATING SIDE)

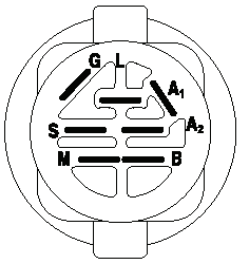

IGNITION SWITCH

POSITION	CIRCUIT "MAKE"
OFF	M+G+A1
RUN/OVERRIDE	B+A1
RUN	B+A1 L+A2
START	B + S + A1

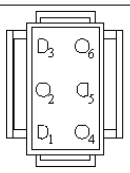

CHASSIS HARNESS CONNECTOR (MATING SIDE)

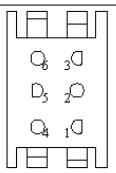

DASH HARNESS CONNECTOR

WIRING INSULATED CLIPS

NOTE: IF WIRING INSULATED CLIPS WERE REMOVED FOR SERVICING OF UNIT, THEY SHOULD BE RE-INSTALLED TO PROPERLY SECURE YOUR WIRING.

NON-REMOVABLE CONNECTIONS

REMOVABLE CONNECTIONS

*OPTIONAL

For 96043030900

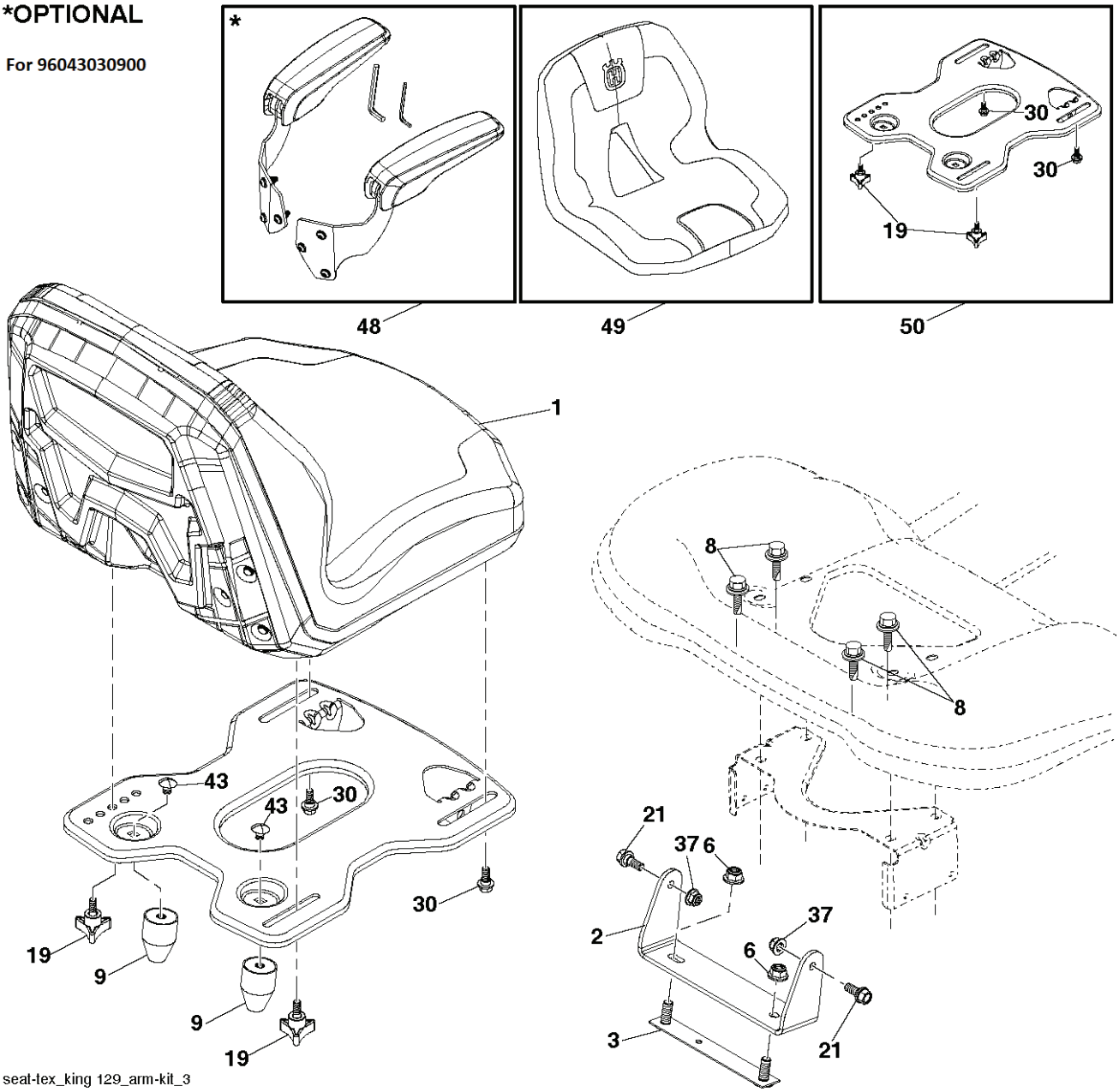

seat-tex_king 129_arm-kit_3

REF.	PART NO.	DESCRIPTION	REMARK	QTY.	KIT
1	597658101	SEAT		1	
2	597329902	BRACKET		1	
3	590777602	BRACKET		1	
6	521996502	NUT		1	
8	532171877	BOLT		1	
9	597785101	BUMPER		1	
19	597783101	KNOB		1	
21	596240701	BOLT		1	
30	597781801	BOLT		1	
37	594944401	NUT		1	
43	597869301	BOLT		1	
48	597658203	SERVICE KIT		1	
49	597959401	COVER		1	
50	598001601	SERVICE KIT		1	

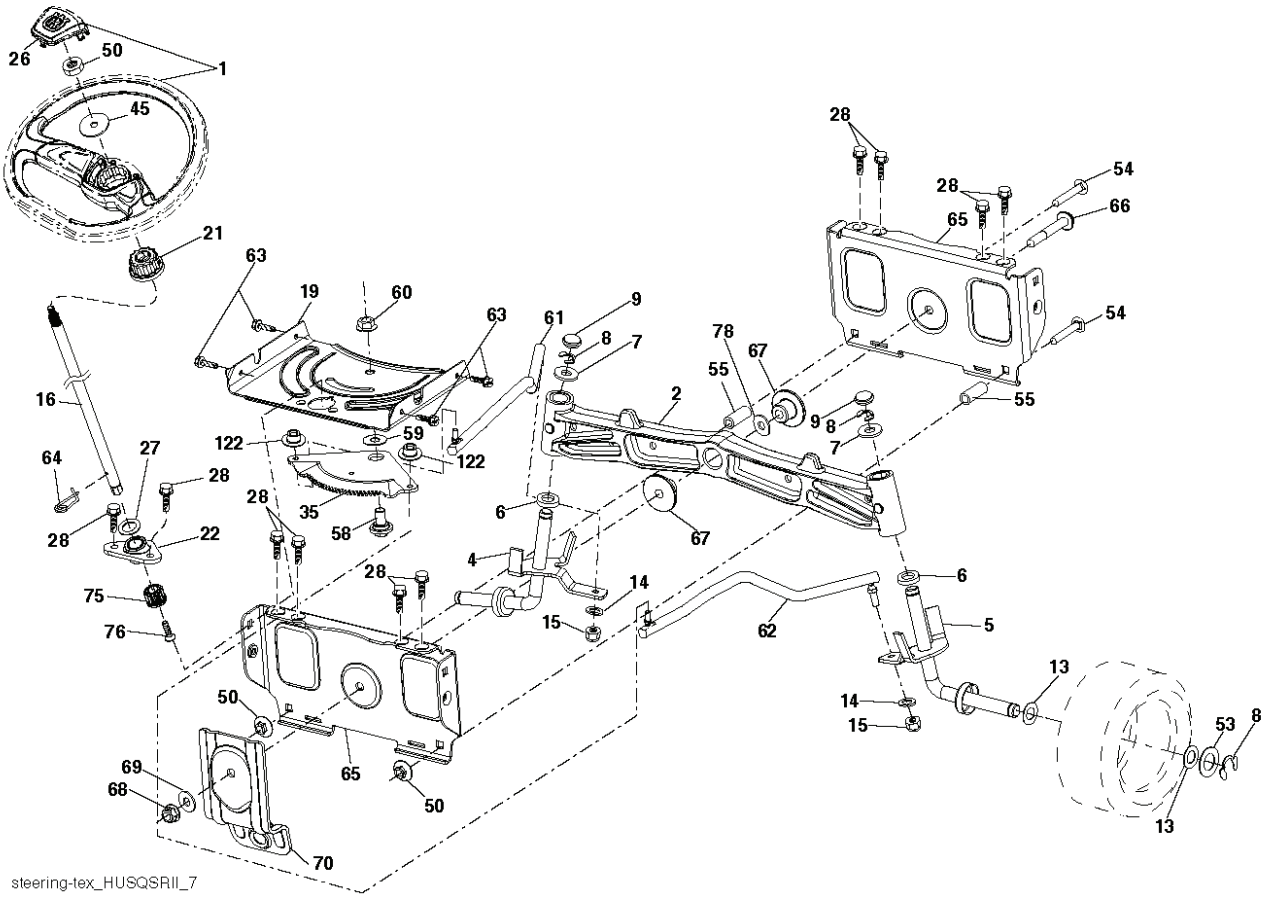

steering-tex_HUSQSRII_7

REF.	PART NO.	DESCRIPTION	REMARK	QTY.	KIT
1	597866101	SERVICE KIT		1	
2	532195968	SHAFT		1	
4	532403089	SPINDLE SHAFT	LH	1	
5	532403090	SPINDLE SHAFT	RH	1	
6	532006266	WASHER		1	
7	532121748	WASHER		1	
8	812000029	RETAINER RING		1	
9	532121232	HUB CAP		1	
13	532121749	WASHER		1	
14	596238701	WASHER		1	
15	873540600	NUT		1	
16	587016002	SHAFT		1	
19	532194729	PLATE		1	
21	586840201	ADAPTER		1	
22	585029802	BEARING		1	
26	594949101	CAP		1	
27	596933401	WASHER		1	
28	817000612	SCREW		1	
35	532194732	PLATE		1	
45	587016401	WASHER		1	
50	873900600	NUT		1	
53	532188967	WASHER		1	
54	874760636	BOLT		1	
55	532414736	SPACER		1	
58	532194747	BOLT		1	
59	532194748	WASHER		1	
60	873971000	NUT		1	
61	597070202	LINKAGE		1	
62	597070302	LINKAGE		1	
63	817000512	SCREW		1	
64	532199849	SPRING RETAINER		1	
65	532194734	BRACKET		1	
66	871020748	BOLT		1	
67	532194737	BUSHING		1	
68	873900700	NUT		1	
69	532199162	WASHER		1	
70	585338801	BRACKET		1	
75	580683701	PINION		1	
76	580683601	SCREW		1	
78	532057079	WASHER		1	
122	532444962	CAP		1	

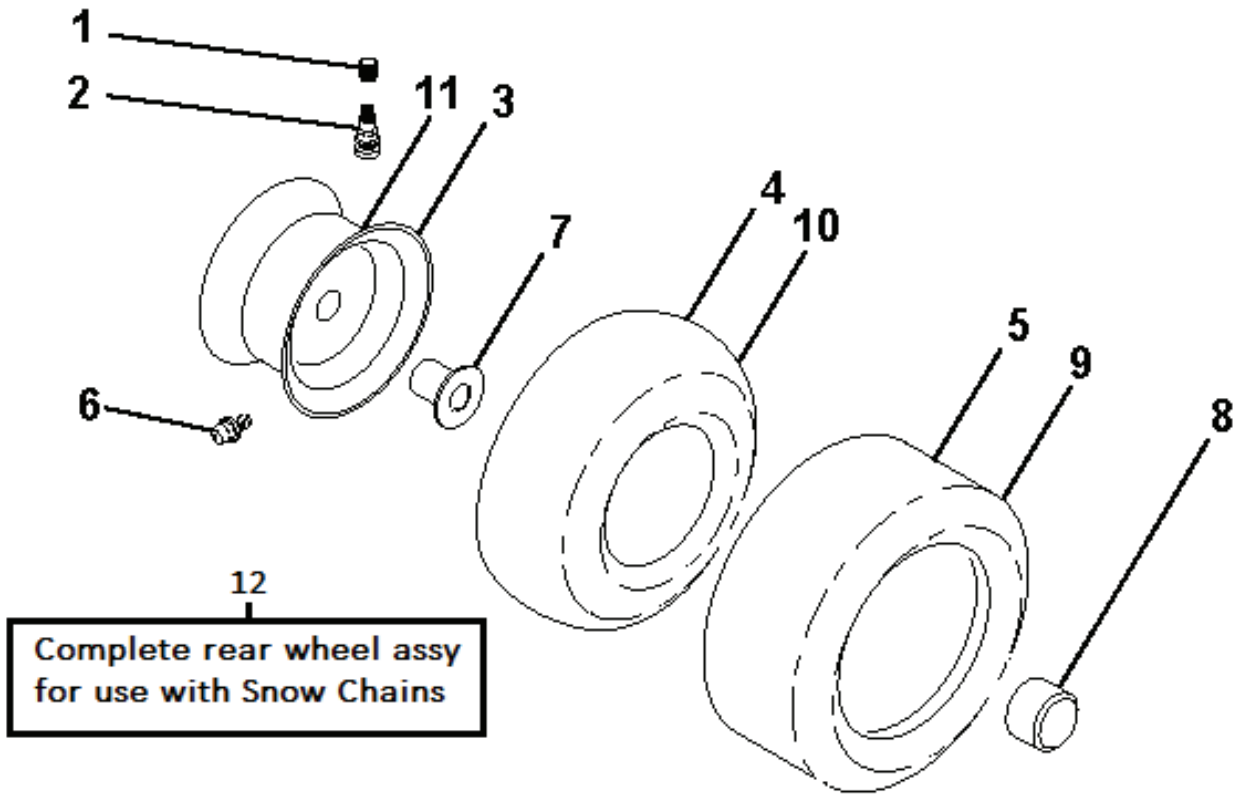
1
2
11
3
7
4
10
5
9
8
6
12
Complete rear wheel assy
for use with Snow Chains

REF.	PART NO.	DESCRIPTION	REMARK	QTY.	KIT
1	532059192	CAP VALVE		1	
2	532065139	NIPPLE		1	
3	532181839	RIM ASSY	FRONT	1	
4	532008134	HOSE	(Service Item Only)	1	
5	532106230	TIRE	FRONT (16 X 6.5–8)	1	
6	532000278	NIPPLE	(Front Wheel Only)	1	
7	532009040	BEARING	(Front Wheel Only)	1	
8	532175039	HUB CAP		1	
9	532122082	TIRE	20x10–8 Rear Tire (Not for use with Snow Chains)	1	
10	532007152	TUBE	(Service Item Only)	1	
11	532138337	RIM SPROCKET	Rear 8"	1	
12	598927701	SERVICE KIT	20x8–8 Rear Wheel Assy - For use with Snow Chains	1	
	532144334	SEALING FOAM		1	

PART NO. REMARK KIT